2. Average Reading

Text B

TYPES OF TERMINALS

I. a) Listen to the text. b) Read it (time limit is 2 min.). c) Find the part of it dealing with the devices which come under the title of terminals. Translate it.

There are many devices which come under the title of terminals. They comprise those where input devices are: (a) key-boards; (b) readers; (c) switches; (d) function knobs; (e) light pens, and where the output devices are: (a) typewriters; (b) printers; (c) punches; (d) displays.

The design of the terminal is not only a technical but essentially a human engineering problem. A well-designed terminal, using all the latest techniques, answering to all the functional requirements and displaying the full information details required, may prove to be useless if the human reaction of the operator has not been taken into consideration to the fullest extent.

The terminals, whether situated at the remote stations or at the command post, must be simple and easy to manipulate. There should be no need for lengthy courses to learn how to operate these terminals; indeed, the design should be aimed at the unskilled operator.

ASSIGNMENTS

I. a) Choose the key sentences from the Text A and compare them with the title of the text. b) Say what the text is about.

II. Skim through the Text B and find the part of it dealing with the design of the terminal. Translate it.

III. Answer the following questions.

1. What are terminals and displays? 2. What are they provided for? 3. Where are the terminals used? 4. What two basic areas are there in Command and Control Systems? 5. What are remote terminals?

IV. Ask additional questions on the Text A and the Text B.

V. Prepare a dialogue on terminals and displays.

VI. Make a short summary of the Text B.

VII. Speak on the design of terminals.

II. CLASSWORK

3. Close Reading

PRE-TEXT EXERCISES

I. Be sure that you know these words and word-combinations.

Scatter v. разбрасывать; CRT's (cathode-ray tubes) электронно-лучевые трубки; data-acquisition terminals оконечные устройства

автоматического сбора данных; data-transaction terminals оконечные устройства ручного ввода данных; inquiry terminals оконечные устройства для запросов; display terminals оконечные устройства для отображения (информации); on-line real-time information непосредственная, в реальном времени информация; measurement interface equipment измерительная аппаратура сопряжения; A/D (analog-digital) converter аналого-цифровой преобразователь (АЦП); storage buffers буферные запоминающие устройства; reference clocks опорные тактовые генераторы; badge readers устройства считывания символов; remote telemetry sensors удаленные телеметрические датчики; time-sharing system система с распределением времени.

II. Translate the following word-combinations from the Text C and use them when retelling the text.

Remote terminal connect the system users; the terminals may be divided into; these terminals generally obtain; the data is collected and inserted; as with the other terminals, that is; data inquiry terminals are the most widely used; in contrast to the previous type; these terminals need not be custom.

III. Analyse the structure of these compound words and translate them.

Data-acquisition; data-transaction; on-line; real-time; A/D converter; multiplexor; demultiplexor; feedback; data-transaction; time-sharing.

Text C

REMOTE TERMINALS

I. a) Read the text. b) Speak on the centralized system by means of communication channels.

Remote terminals connect the system users scattered over a wide geographical area with the centralized system by means of communication channels. For Command and Control applications, the terminals may be divided into five major categories according to their field of application:

(a) Data-acquisition terminals. (b) Control terminals. (c) Data-transaction terminals. (d) Enquiry terminals. (e) Display terminals.

In the class of data acquisition terminals are the sensor type terminals which are "hard wired" into the process so as to collect on-line real-time information. These terminals generally obtain measurement interface equipment, A/D converters, storage buffers, reference clocks, communication multiplexors and modems.

The control terminals are complementary to the data acquisition terminals, since they are intended to automatically implement the system decisions. These terminals contain instrument interface equipment, D/A converters, storage buffers, communication demultiplexors and modems. They are used in the feedback process of the system where the operation must change its control path in real time.

In data-transaction terminals, the data is collected and inserted by human operation instead of by automatic instruments. As with the other terminals, the data-transaction terminals connected on-line to the system, that is, the data which is inserted by the human agent is transfered directly to its destination, receiving instantaneous reaction and providing the operator with a reply in "real-time".

Data inquiry terminals are the most widely used terminals particularly the time-sharing systems. In contrast to the previous type terminal discussed, these terminals need not be custom designed for a specific application but may be mass produced to cover a wide range of applications. With these inquiry terminals, the operator can insert specific request and receive the computer's reply on the same terminal.

Display terminals are primary output devices where the data is displayed for decision making in the command post. They may be divided into two main groups: personal displays and large screen displays. Personal displays are of the type of CRT key-board displays. Among them one must also include the graphic displays which are used for computer-aided designs, which allow on-line graphical conversation for sophisticated analysis of problems.

ASSIGNMENTS

I. a) Divide the text into logical parts. b) Find the key sentences, analyse and translate them.

II. Find the part of the text containing information about data inquiry terminals. Translate it.

III. Answer the following questions.

1. How do remote terminals connect the system users scattered over a wide geographical area? 2. What does the term "terminal" include? 3. What devices are display terminals? 4. What groups may displayed terminals be divided into?

IV. Prepare a dialogue on remote terminals.

V. Speak on display terminals.

VI. Make up a plan of the Text C and retell it according to your plan.

VII. Translate the Text C to be sure you understand it well.

4. Searching Reading

PRE-TEXT EXERCISES

I. Match the following English words and word-combinations with the Russian ones.

basic input/output	сложный, замысловатый
interface	подтверждение приема (*сообщения*), квитирование (*сообщения*)
acknowledgement (handshaking)	основы ввода/вывода
protocol	сопрягать, устройство сопряжения (интерфейс)
elaborate	перемещаться
specify	простой, ожидание
	протокол (правила обмена данными)
mark	*зд.* проба, пропуск
idle	*зд.* точно определять
space	метка, маркер, отметка; токовая посылка
migrate	

Text D

BASIC INPUT/OUTPUT

I. Read the text and say about basic input/output.

In most third-generation microprocessors, microprocessors are interfaced to peripheral devices directly from the data bus of the MPU chip or through special devices or chips designed for that purpose. In future microprocessors, peripheral device functions will migrate into the microprocessor chip. In either case, this interface constitutes the input/output structure of a microprocessor. Microprocessor input/output may be single-line, multiline, parallel, or serial.

Many peripheral devices require some sort of acknowledgement or handshaking between the device and the microprocessor. This coupling phenomenon tells the microprocessor that the device either has data ready for the microprocessor or, vice versa, the microprocessor has data ready for the device. Handshake occurs when the "other" unit responds with an acknowledging signal. The specific interpretation of the control signal is called the protocol. An orderly exchange is desired. Protocols can become elaborate when the byte and message formats as well as the message sequence are to be specified. For more sophisticated interfaces, microprocessors use interface circuits. Handshaking is, then, easily handled by resources in the peripheral devices.

Many serial interfaces for a microprocessor have a typical data format. This character format requires a start bit followed by 8 information bits, and 1 or 2 stop bits which follow the 8 information bits. A "mark" or a constant binary value of 1 indicates to the device and to the MPU that the transmission is in the idle mode (no characters transmitted). Notice that the "start" bit is always a "space" or a 0. Eleven bits are required in order to transmit every character in this format. There are other versions of serial data formats, although this is very common.

I. Answer the following questions.

1. To what device are microprocessors interfaced? 2. Where will peripheral device migrate? 3. What does interface constitute? 4. When does handshake occur? 5. What is called the protocol? 6. When can protocols become elaborate?

II. Discuss the problem of basic input/output.

III. Express your opinion of the topic of the lesson.

IV. Look through the latest magazines and find additional information on the topic. Discuss it.

III. GRAMMAR EXERCISES

I. Define the form and function of the Participles in these sentences and translate them.

1. A well-designed terminals using all the latest techniques, answering to all the functional requirements and displaying the full information details required, may prove to be useless if the human reaction of the operator has not been taken into consideration to the fullest extent. 2. The command post is the point where all the processed data required for management decision is displayed, and accordingly it is basically an output device. 3. Remote terminals connect the system users scattered over a wide geographical area with the centralized system by means of communication channels.

II. Find the Infinitive in these sentences, state its function and translate.

1. The terminals, whether situated at the remote stations or at the command post, must be simple and easy to manipulate. 2. In the class of data acquisition terminals are the sensor type terminals which are "hard wired" into the process so as to collect on-line real-time information. 3. Eleven bits are required in order to transmit every character in this format.

III. Translate the following sentences paying attention to modal verbs and their equivalents.

1. Microprocessor input/output may be single-line, multiline, parallel, or serial. 2. Protocols can become elaborate when the byte and message formats as well as the message sequence are to be specified.

Lesson 3. DATA TRANSMISSION

I. INDEPENDENT WORK

In the Laboratory

1. Skimming Reading

PRE-TEXT EXERCISES

I. a) Make sure that you know these words. Say what Russian words help you to guess their meanings. b) Repeat these words after the speaker.

Telephone, limit, analogue, illustrate, basic elements, form, specific, communication, phase, binary, (de)modulation, popular, configuration, pulse, criterion, bit, information, voltage, individual, process, instruction, construct, extravagant, address, organization, alphabetic, Arabic.

II. a) Listen, repeat and memorize the following words and word-combinations. b) Check if you know their meanings.

Data transmission передача данных; voice traffic речевая нагрузка; analogue-type signals сигналы аналогового типа; data transmitter receiver приемо-передатчик данных; remote geographical locations отдаленные географические точки; encode закодировать; specific transmission handling особая обработка при передаче; raw form необработанная, сырая форма; modem модем (модулятор-демодулятор); translation трансляция, преобразование; voice frequency waveform колебание звуковой частоты; binary data pulses двоичные импульсы; simplex симплексный (односторонний); half-duplex полудуплексный (*режим, передача*); insert *зд.* размещаться; path тракт; public telephone network телефонная сеть общего пользования; carry data нести, передавать данные; 4-wire line circuit четырехпро-

водная линейная цепь; while conversely тогда как обратно; request запрос; communication procedures an answer-back процедуры (методы) связи с подтверждением приема (с квитированием).

Text A

SIGNIFICANCE OF DATA TRANSMISSION

I. a) Listen to the text, mind the English intonation. b) Read the text to yourself and grasp the main idea of it.

The successful operation of a Command and Control System depends essentially on its ability to transfer data between remote geographical locations speedily and correctly.

Most of the data transmission is conducted over the traditional telephone lines, apart from a few specially designed lines with wider bandwidth. The standard telephone lines are limited by their upper frequency, since they were designed to carry only voice traffic, that is only analogue type signals. In order to transmit digital data over these lines, the data generated by the computer or by the terminals must be converted into analogue signal so that they can be transmitted in their encoded form over the ordinary telephone lines.

2. Average Reading

Text B

TYPES OF TRANSMISSION

I. a) Listen to the text. b) Read it (time limit is 4 min.). c) Find the part of it dealing with the three types of transmissions.

Fig. 6.2 *a* illustrates the basic elements required for digital data transmission. The data to be transmitted must first be encoded into a form suitable for specific transmission handling, as the transmission over a communication line produces attenuation and phase delay; it is impractical to transmit the digital pulses in their raw form over telephone lines. It is necessary to modulate the data to be transmitted over analogue telephone lines and to demodulate the signal at the

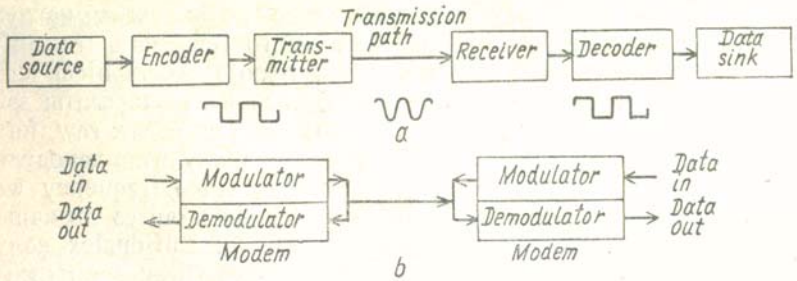

Fig. 6.2. The structure of a digital data communication system:
a basic elements; *b* a modern system configuration.

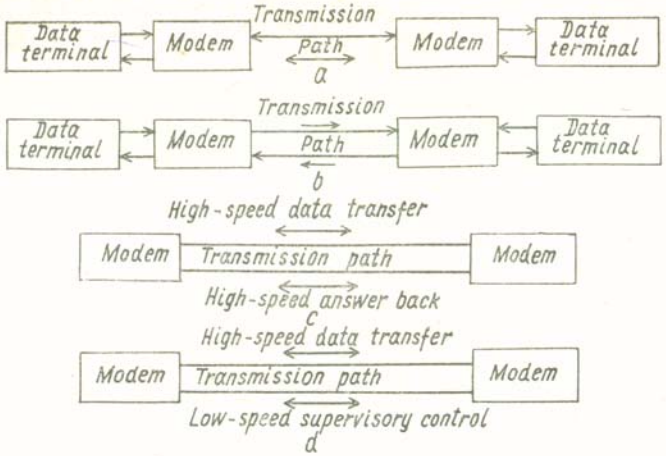

Fig. 6.3. Types of transmission:
a point-to-point half-duplex; *b* point-to-point duplex; *c* duplex transmission, operating in half-duplex mode with high-speed answer-back; *d* with low-speed supervisory control.

receiver end. Similarly as to the speech, data transmission is generally possible to both directions, although not simultaneously. The data transmitter receiver which perform the dual process of modulation and demodulation is consequently referred to by the abbreviated form of modem (see Fig. 6.2 *b*). The modem performs the operation of translation between the binary data pulses and the voice frequency waveform; hence it could also be regarded as analogue to digital and digital to analogue converters.

Without regard to the communication media, there are three types of transmission. (a) Simplex transmission, where a line carries data in one direction only, as shown in Fig. 6.3*a*. (b) Half-duplex transmission, where a line can carry data in either direction but only in one direction at a time, as shown in Fig. 6.3*b*. Here identical modems are inserted at both end of the transmission path. This is a most popular data transmission configuration, as it can be used in any public telephone network. (c) Duplex (or full duplex) transmission, where a line can carry data in both directions simultaneously, as shown in Fig. 6.3*c*. This double direction can be achieved by either transmission over two different frequency bandwidths or by a 4-wire line circuit.

Although data can flow in both directions simultaneously in a duplex configuration, it is common practice to operate it in a half-duplex mode. In these applications the digital information flows in one direction while conversely the control data flows in the other direction to indicate either an acknowledgement or a request for retransmission of the message. This mode of operation (shown in Fig. 6.3*d*) saves time when two terminals or two computers communicate. It must be appreciated that for most communication procedures an answer-back is essential.

I. a) Choose the key sentences from the Text A and compare them with the title of the text. b) Say what the text is about.

II. Skim through the Text B and find the part of it dealing with data transmission receiver. Translate it.

III. Find the part in the Text B containing information about the mode of operation shown in Fig. 6.3*a*.

IV. Answer the following questions.

1. What does the successful operation of a Command and Control System depend on? 2. Over what lines is most of the data transmission conducted? 3. What must be done in order to transmit digital data over these lines? 4. What is necessary to do with the data to be transmitted over analogue telephone lines? 5. What is the abbreviation for the dual process of modulation and demodulation? 6. What types of transmission do you know?

V. Prepare a dialogue on data transmission.

VI. Speak on the modem system configuration.

VII. Examine Figs. 6.2, 6.3 and comment on:

1. Basic elements of a digital data communication system.
2. Point-to-point half-duplex; point-to-point duplex.
3. Duplex transmission, operating in half-duplex mode with high-speed answer-back.

VIII. Make a short written summary of the Text B.

II. CLASSWORK

3. Close Reading

PRE-TEXT EXERCISES

I. Be sure that you know these words and word-combinations.

Pulse waveform code formats форматы импульсно-кодированных сигналов; return-to-zero method запись методом возврата к нулю; penaltry штраф, дополнительная плата; ternary троичный; quadric четверичный; consequitive bits последовательные биты.

II. a) Define the attributes in these word-combinations. Say what part of speech they are expressed by. b) Translate them.

Binary data transmission; the first criterion of division; half binary transmission; second criterion of division; the transmission of each bit of information; a third accepted criterion of division; respective pulse formats; the same binary information; the unit of signalling speed; the actual number of binary digit.

III. Translate the following word-combinations and use them retelling the Text C.

There are many different types of; the various coding patterns are illustrated in Fig.; the unit of signalling speed should be measured by the number of; the term bits/s refers to.

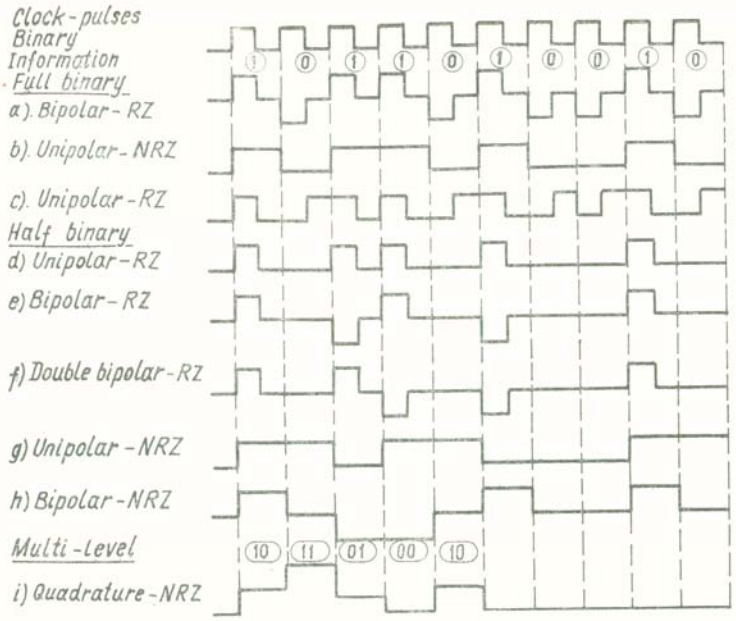

Fig. 6.4. Pulse code formats in data transmission.

IV. Pay attention to the translation of «that of» which is used instead of the noun mentioned.

1. A second criterion of division is that of relation to the zero level. 2. A third accepted criterion of division is that of direction.

Text C

PULSE CODE FORMAT

I. a) Read the text. b) Speak on different types of pulse waveform code format.

There are many different types of pulse waveform code formats which may be used in binary data transmission. All the code formats could be divided into three classes. The first criterion of division is the form of information transmission, viz. (a) Full binary transmission, where both the "0" and "1" bits are part of the formats. (b) Half binary transmission, where only the "1"'s are transmitted, having the "0"'s recognized by the absence of a pulse at the time of clock. (c) Multiple binary transmission, where ternary and quadric codes are used for each transmitted pulse. A second criterion of division is that of relation to the zero level, viz. (a) Return-to zero (RZ), where there is a return to the zero level after the transmission of each bit of information. (b) Non-return-zero (NRZ), where there is no voltage level change if consecutive bits are transmitted, although

there is a level change when there is an information variation from 0 to 1 or 1 to 0.

A third accepted criterion of division is that of direction, viz. (a) Unipolar, where the pulses are in the single direction. (b) Bipolar, where the pulses are in both directions.

The various coding patterns for the respective pulse formats are illustrated in Fig. 6.4*a*—*i* where each pattern represents the same binary information of 1011010010.

For data transmission, the unit of signalling speed should be measured by the number of bits transmitted per second. The term "bit per second" (bits/s) refers to the actual number of binary digits that are transmitted per second.

ASSIGNMENTS

I. a) Divide the text into logical parts. b) Find the key sentences, analyse and translate them.

II. Find the part of the text containing information about the various coding patterns for the respective pulse formats illustrated in Fig.6.4. Translate it.

III. Answer the following questions embracing the contents of the Text C.

1. How many classes could all the code formats be divided? 2. What are these classes? 3. What is the first criterion of division? 4. What is the second criterion of division? 5. What is the third criterion of division?

IV. Ask additional question on the Text C and answer them. Work in pairs.

V. Prepare a dialogue on pulse code formats.

VI. Retell the Text C according to your plan.

VII. Translate the Text C to be sure you understand it well.

4. Searching Reading

PRE-TEXT EXERCISES

I. Match the following English words and word-combinations with the Russian ones.

extravagant	связать друг с другом так, что
alphanumeric	двоичный код знака (символа)
instruction half word	двоичный разряд
variable length field	полуслово
zone part of two ...	зонная часть из двух ...
numeric part of four ...	буквенно-цифровой
binary digit	командное полуслово
treat	сохранить, сэкономить
binary character code	числовая часть из четырех ...
link in each a way that	байты, к которым обращение идет по одному адресу

converse	обращаться
conserve	*зд.* преобразовывать
half word	заглавные буквы
bytes referenced by a single address	восьмиразрядный код знака
upper case letters	знак пунктуации
punctuation mark	расточительный
eight character code	поле переменной длины

II. Translate the following word-combinations from the Text D and memorize them.

The individual storage cell provides; this basic unit is usually referred to as; computers are normally built with; although it would be possible to construct; the fundamental group of bits is called; the size of a byte is chosen so that; the individual bits of a byte are linked; alphabetic symbols are represented.

Text D

BITS, BYTES, AND WORDS

I. Read the text and say about the smallest unit of digital information.

The individual storage cell provides the smallest unit of digital information which can be stored within a computer. This basic unit is usually referred to as a binary digit or bit. Computers are normally built with a large number of bit storage cells to that programs involving extensive instruction sets and data can be stored and processed internally.

Although it would be possible to construct computer circuits to give individual addresses to each binary digit stored in the computer memory, such an arrangement would be very extravagant. For purposes such as alphanumeric data, groups of bits are normally stored together under one common address and treated by the computer as a unit of information. In some recent computers the fundamental group of bits is called a byte. The size of a byte, usually six or eight bits, is chosen so that the byte can store one alphanumeric character using the binary character code adopted for the computer. The individual bits of a byte are electrically linked in each a way that a single memory address applies to the entire byte. For such machines the byte is the basic units of addressable information.

While bytes are well adapted for character representation and storage, larger organizations of bits must be provided for storage of instructions and numbers. Such a large unit is formed by linking bytes together to form a word. The IBM 360 computer system, for example, uses four eight-bit bytes to form a word. The information stored in a word of this type can be directly referenced through the use of one address.

The various addressable groupings of information units are not restricted to bytes and words. It is found, for example, that instruc-

tions do not require as many bits as are needed for number representation. Hence, to conserve computer memory space instruction half words are often used. Likewise, although numbers are normally represented in words, for more accurate arithmetic it is possible to link two words together to form an addressable double word. The ultimate flexibility now available in large computer system uses variable length fields composed of suitably linked bytes referenced by a single address.

Alphabetic symbols and special characters are represented in computers through codes on sequences of binary digits. Normally at least six bits ($2^6 = 64$ separate patterns) are required to establish a unique code set for the 26 upper case letters, the 10 Arabic numerals, various arithmetic operators, and punctuation marks. Most large computers having a byte structure use eight character codes ($2^8 = 256$ separate patterns) to take advantage of the larger available character set.

Both the six and eight bit character representations are subdivided into two parts: a zone part of two or four bits and a numeric part of four bits.

ASSIGNMENTS

I. Answer the following questions embracing the contents of the Text D.

1. What does the individual storage cell provide? 2. How is this basic unit usually referred to? 3. What are computers normally built with?

II. Ask additional questions on the Text D and answer them. Work in pairs.

III. Prepare a dialogue on the representation of logical data.

IV. Make up a plan on the Text D and retell the text according to your plan.

V. Speak on typical organization within a computer using six or eight-bit bytes.

VI. Discuss the problem of bit information.

VII. Express your opinion of the topic of the lesson.

VIII. Look through the latest magazines and find additional information on the topic of the lesson. Discuss it.

III. GRAMMAR EXERCISES

I. a) Analyse the following sentences. Define subjects and predicates in the principle and in subordinate clauses. b) Translate these sentences.

1. The standard telephone lines are limited by their upper frequency since they were designed to carry only voice traffic that is only analogue type signals. 2. This is a most popular data transmission configuration, as it can be used in any public telephone network. 3. There are many different types of pulse waveform code formats which may be used in binary data transmission.

II. Define the form and function of the Infinitive in these sentences and translate them.

1. In order to transmit digital data over these lines the data generated by the computer or by the terminals must be converted into analogue signals so that they can be transmitted in their encoded form over the ordinary telephone lines. 2. The data to be transmitted must first be encoded into a form suitable for specific transmission handling, as the transmission over a communication line produces attenuation and phase delay; it is impractical to transmit the digital pulses in their raw form over telephone lines. 3. It is necessary to modulate the data to be transmitted over analogue telephone lines and to demodulate the signal at the receiver end.

III. Find the Participles in these sentences, state their forms and function and translate sentences with them.

1. Fig. 6.2*a* illustrates the basic elements required for digital data transmission. 2. Half binary transmission, where only the "1" 's are transmitted, having the "0"'s recognized by the absence of a pulse at the time of clock. 3. The information stored in a word of this type can be directly referenced through the use of one address.

Lesson 4. MULTIPLEXORS AND CONCENTRATORS

I. Independent Work.
In the Laboratory.
1. *Skimming Reading.*
Pre-text Exercises.
Text A. Sharing the Line Resources.
2. *Average Reading.*
Text B. Frequency-division Multiplexor.
Assignments.
II. Classwork.
3. *Close Reading.*
Pre-text Exercises.
Text C. Switching Centres.
Assignments.
4. *Searching Reading.*
Pre-text Exercises.
Text D. Microprocessors.
Assignments.
III. Grammar Exercises.

I. INDEPENDENT WORK

In the Laboratory

1. Skimming Reading

PRE-TEXT EXERCISES

I. a) Make sure that you know these words. Say what Russian words help you to guess their meanings. b) Repeat these words after the speaker.

Multiplexor, concentrator, transmission, reconstruction, alternative, principle, provision, centre, location, computer, configurate,

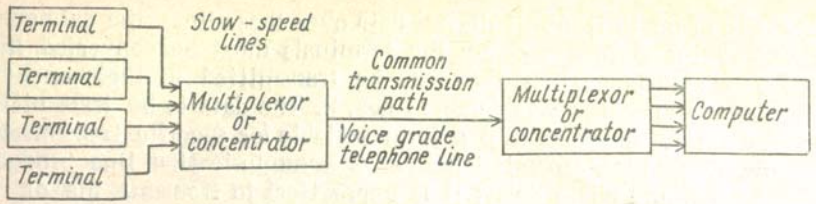

Fig. 6.5. The principle of sharing the line between a number of terminals.

microprocessor, plan, arithmetic, telephone, program, electronically, detail, musical.

II. Listen, repeat and memorize the following words and word-combinations. b) Check if you know their meanings.

Multiplexor устройство цифрового группообразования, уплотнения; мультиплексор; fixed predetermined method постоянный заранее заданный метод; overlapping перекрытие; encroaching вторжение, проникновение; carrier trunk system магистральная высокочастотная система; frequency-division multiplexor мультиплексор с частотным разделением; resource ресурс (*линии связи, машины* и т. п.); share разделять, распределять; allocation распределение, разделение, прикрепление; to smooth сглаживать; frequency slot частотный сегмент; guard band защитная полоса; voice grade line высококачественная телефонная линия; wide-band cable широкополосный кабель.

III. Give the initial forms of the following words and translate them.

Operating, sending, transmission, reconstructing, receiving, utilization, sharing, dynamically, randomly, arrangement.

Text A

SHARING THE LINE RESOURCES

I. a) Listen to the text, mind the English intonation. b) Read the text to yourself and grasp the main idea of it.

The principle of sharing the same line between a number of terminals is shown in Fig. 6.5. The multiplexor or the concentrator combines several different signals operating at low speed, sending them simultaneously over the same transmission path and then reconstructing them again at the receiving end.

Communication multiplexors generally refer to the direct utilization of the transmission path by the sharing of the resources of time or frequency. In other words, the sharing is based on the static allocation of the resources by means of a fixed predertermined method. The concentrators also share the resources, but in contrast to multiplexors, they utilize the line dynamically. In this case, the line resources are shared randomly and not according to a fixed arrangement. With the concentrators better efficiency can be obtained. The function of the concentrator is to smooth the data flow in the transmission path.

2. Average Reading

Text B

FREQUENCY-DIVISION MULTIPLEXOR

I. a) Listen to the text. b) Read it (time limit is 2 min.). c) Explain the function of frequency-division multiplexor.

Frequency-division multiplexors share the frequency spectrum of the transmission path among a number of data channels. Each data channel receives a unique frequency band which is permanently allocated to the channel. If the full bandwidth F is divided into R channels, then each channel has the frequency bandwidth of F/N. However, each channel can transmit at speeds far less than the frequency slot of F/N available to it. The limitation is due to the need of guard band between adjacent channels. The guard frequency bands prevent any sideband signals from overlapping and encroaching on the adjacent channels.

The frequency-division multiplexing the transmission of the data in all the channels is in parallel form. Alternatively, each channel can transmit a bit belonging to the same character, thus transmitting the character in parallel. Frequency-division multiplexors may be used to share a one voice grade line among a number of slow-speed terminals, or alternatively may be used to share a wide-band cable among a number of voice channels.

ASSIGNMENTS

I. a) Choose the key sentences from the text A and compare them with the title of the text. b) Say what the text is about.

II. Skim through the text B and find the part of it dealing with the data channels.

III. Find the part of the Text B containing information about the limitation of channels.

IV. Answer the following questions.

1. What signals does the multiplexor or concentrator combine? 2. What do communication multiplexors generally refer to? 3. What do frequency-division multiplexor share? 4. What does each data channel receive? 5. What frequency bandwidth has each channel if the full bandwidth F is divided into R channels? 6. At what speed can each channel transmit? 7. What is the limitation due to? 8. What do the guard frequency bands prevent? 9. What is the form of the transmission of the data in all the channels in frequency-division multiplexing?

V. Prepare a dialogue on frequency-division multiplexors.

VI. Speak on multiplexors and concentrators.

VII. Examine Fig. 6.5 and comment on the principle of sharing the line between a number of terminals.

VIII. Make a short summary of the Text B.

II. CLASSWORK

3. Close Reading

PRE-TEXT EXERCISES

I. Be sure that you know these words and word-combinations.

Switching centres коммутационные центры; on the principle of point to point на основе прямой связи (каждый с каждым); по provision for alternative routines без обеспечения альтернативных маршрутов; data flow поток данных; fair-sized traffic изрядная нагрузка; comprehensive terminal-to-terminal communication обширная связь между оконечными устройствами; hub центр; star network звездная сеть; "torn tape" switching centre коммутационный центр с обрывом ленты; one of the links is down одна из линий выходит из строя; non-switched некоммутируемый; to bring *зд.* вывести; to effect *зд.* приводить к; spread распространение; rout маршрутизировать, направлять.

II. a) Pay attention to the attributes in these word-combinations and define the part of speech they are expressed by. b) Translate them.

The simplest communication network; sophisticated communication network; a comprehensive terminal-to-terminal communication; large communication installation; many switching centres; local switching centres; each centre functions; other associated terminals.

Text C

SWITCHING CENTRES

I. a) Read the text. b) Speak on the switching centres.

All the simplest communication networks are operated on the principle of point to point with no provision for alternative routines. As the network grows, the efficiency is correspondingly reduced.

In sophisticated communication networks, the data flow is not only from the terminals to a centre; there is also considerable traffic

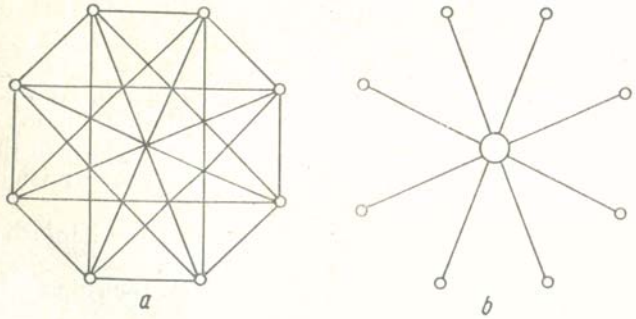

Fig. 6.6. The types of switched networks:
a the non-switched network; *b* the central switched network.

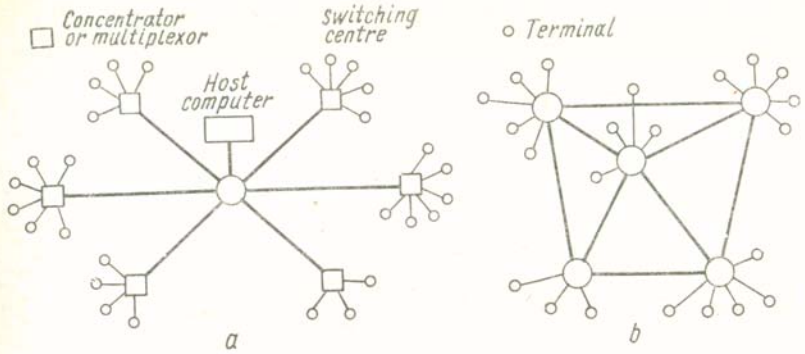

Fig. 6.7. The structure of large communication networks:
a with one switching centre; *b* with many switching centres.

between terminal and terminal. In large network there could be a multiplicity of computers distributed over wide geographical locations, where there is a fair-sized traffic between the computers. This type of communication network configuration is common in Command and Control Systems.

To achieve a comprehensive terminal-to-terminal communication in a simple network, each terminal must be connected directly to all the others. That is, all the terminals have point-to-point lines between them, as shown in Fig. 6.6*a*, which illustrates the ability of all the terminals to communicate at the same time. This network (which is known as non-switched) is obviously impractical for large networks. Therefore, the only possible course is to bring all the terminal lines to a central location, as shown in Fig. 6.6*b*. The introduction of the centre switching which exploits the whole network (and not just a single transmission path) and effects a saving in communication lines. The centre station is located at the hub of the communication network, linking all the remote stations in a configuration known as a star network (Fig. 6.7*a*).

In large communication installation, such as Command and Control Systems, there could be many switching centres in the network (as shown in Fig. 6.7*b*). The spread of computer resources over wide geographical locations requires local switching centres that can communicate with other remote centres. Each centre functions as a unique unit whose purpose is to switch and route message from any of the terminals associated with it to any other associated terminal or centre in the network.

ASSIGNMENTS

I. a) Divide the text into logical parts. b) Find the key sentences, analyse and translate them.

II. Find the part of the text containing information about terminal-to-terminal communication. Translate it.

III. Skim through the text and find the part of it dealing with the introduction of the centre switching which exploits the whole network.

IV. Answer the following questions.

1. On what principle are all the simplest communication networks operated? 2. What must be done to achieve a comprehensive terminal-to-terminal communication in a simple network? 3. What does the spread of computer resources over wide geographical locations require? 4. What is the purpose of each centre functioning as a unique unit?

V. Prepare a dialogue on your own situation.

VI. Speak on switching centres according to your own plan.

VII. Translate the Text C to be sure you understand it well.

4. Searching Reading

PRE-TEXT EXERCISES

I. Match the following English words and word-combinations with the Russian ones.

follow	принцип управления с помощью «хранимой программы»
pocket calculator	*зд.* ручка управления
plenty	вязальные иглы
to trigger an alarm	*зд.* придерживаться, следовать
grading potatoes	поднимать тревогу
knitting	*зд.* множество
timing heart-beats	подсчет количества ударов сердца
the principle of "stored program control"	сортировка картофеля
kitchen	вязание
knob	карманный калькулятор
clockwise	по часовой стрелке
knitting needles	кухня

II. Translate the following word-combinations from the Text D. Use them retelling the text.

The plan can be anything you like; people often think of; so they can, of course; since arithmetic operations can be represented as; but there are plenty of other kinds of; that can be expressed, precisely, as; it is a truly general-purpose information-processing device; in other words, control its operation; taking the form of the program of instructions to be executed; it is no good saying; the program must be expressed in; this is why it can't recognize; to take action on the outside world; a connection must be provided between; we will have more to say about interface later.

Text D

MICROPROCESSOR

I. Read the text and say about microprocessors.

A microprocessor is a device that follows a plan. The plan can be anything you like, provided it can be specified exactly as a sequence of steps. People often think of microprocessors as performing arithmetic, like a pocket calculator. So they can, of course, since arithmetic operations can be represented as plans — think of the procedure for addition, or long division. But there are plenty of other kinds of plan. Simply counting events can be expressed as a plan. Or triggering an alarm when certain conditions are met (the conditions must be stated precisely, like "temperature greater than 80°C, rather than "dangerously hot"). Or dialling telephone digits. Or associating a list of telephone numbers with names. Or grading potatoes, knitting, timing heart-beats.

A microprocessor can do any information-processing task that can be expressed, precisely, as a plan. It is truly general-purpose information-processing device. The plan which it is to execute — which will, in other words, control its operation — is stored electronically. This is the principle of "stored program control". Without a program the microprocessor can do anything. With one, it can do anything.

The way you have to formulate a plan for a microprocessor is quite different from how you would do it for a person. A microprocessor's plan must be procedure-directed; taking the form of a program of instructions to be executed to accomplish the result. It is no good saying "go into the kitchen and turn the knob on the wall 3 degree clockwise" — which route should be taken?— what if the door is closed? — which wall? — where on the wall? The program must be expressed in miniscule steps of detail. To get a microprocessor to do something, we must ourselves know how to do it, in detail. This is why it can't recognize faces — although we can, we don't know how.

Furthermore microprocessors can only perform information-processing tasks. To take action on the outside world, or to receive signals from it, a connection must be provided between the microprocessor's representation of information (as digital electronic signals) and the real-world representation — like dots of light on a display screen, or a musical note, or a motion of knitting needles. Such a connection between information representations is called an "interface".

ASSIGNMENTS

I. Answer the following questions.

1. What device is a microprocessor? 2. What is a microprocessor like? 3. Can counting events be expressed as a plan? 4. What is the way to formulate a plan for a microprocessor? 5. Can we get a microprocessor to do anything? 6. What can microprocessor perform?

II. Ask additional questions on the Text D and answer them. Work in pairs.

III. Discuss the problem of microprocessors.

IV. Express your opinion of the problem.

V. a) Look through the latest magazines and find the information on the topic. b) Prepare a short report using the information.

III. GRAMMAR EXERCISES

I. Define the function of the *ing*-forms in these sentences and translate them.

1. The multiplexor or the concentrator combines several different signals operating at low speed sending them simultaneously over the same transmission path and then reconstructing them again at the receiving end. 2. Communication multiplexors generally refer to the direct utilization of the transmission path by the sharing of the resources of time or frequency. 3. When voice grade lines are used with frequency division multiplexors, only a total maximum speed of about 2000 bits/s can be reached. 4. The principle of sharing the same line between a number of terminals is shown in Fig. 6.5. 5. There could be many switching centres in the network.

II. State the function of the Participle in these sentences and translate them.

1. The sharing is based on the static allocation of the resources by means of a fixed predetermined method. 2. There could be a multiplicity of computers distributed over wide geographical locations. 3. The centre station is located at the hub of the communication network linking all the remote stations in a configuration known as a star network.

Lesson 5. PROGRAMMING

I. INDEPENDENT WORK

In the Laboratory

1. Skimming Reading

PRE-TEXT EXERCISES

I. a) Make sure that you know these words. Say what Russian words help you to guess their meanings. b) Repeat these words after the speaker.

Algorithm, instruction, class, problem, complex, geometric, adequate, basic, element, practical, formal, programmer, information, fundamental, mathematical, nature, telephone, automated, minimum, documentation, program, standard, structure.

II. a) Listen, repeat and memorize the following words and word-combinations. b) Check if you know their meanings.

Flowchart блок-схема (*в программах*); unambiguous точный, недвусмысленный; ordered set of instructions упорядоченный набор команд; lead to приводить к; problem задача; abbreviated сокращенный; not an adequately precise means не адекватно точное средство; in terms of geometric shapes в терминах геометрических форм; introduce logical ordering through spatial location and flowlines вводить логическое упорядочение с помощью пространственного размещения и линий связи (*в блок-схемах*); in the shape rectangular or rombic boxes в форме прямоугольных или ромбических четырехугольников (*в блок-схемах*); will be acceptable instruction sets for computer будут приемлемыми наборами команд для ЭВМ; formal statements of computer languages формальные предписания (высказывания, операторы) машинных языков; flowchart language язык блок-схем; flowchart actions (in the process and decision boxes) действие по блок-схеме (в четырехугольниках процессов и решений); fundamental similarity фундаментальное подобие; conversion of the algorithm to an operating computer program преобразование алгоритма в рабочую машинную программу; variables переменные; in obtaining values for different quantities в получении (числовых) значений различных величин; finding the best routine for a cross-country telephone call отыскание наилучшего маршрута для телефонного вызова через всю страну; take different values принимать различные значения; separate memory storage location отдельная ячейка ЗУ; lean (on) основываться (на), исходить (из), invent выдумывать, изобретать; HEIGHT высота; NUMBER число; to specify operation on and between задать операции над и между; the storage location we call X ячейка памяти, которую мы назвали X; a string of digits (Os or 1s) последовательность цифр (нулей или единиц); identifier идентификатор; repeatedly повторно, неоднократно; numerical числовой.

III. Translate these word-combinations and use them reading the Text A and the Text B.

For simple task; algorithm may be; to overcome this difficulty flowcharts provide; most flowcharts are developed; it is probable

that some day; the value of flowcharts in preparing computer programs can be considered; in a computer, values of variables are contained in; to identify these storage location so that; by doing this we are able to; thus, we use; the content of a storage location may be interpreted as; as might be expected; finally, certain operations of mathematical logic require the use of.

Text A

ALGORITHM, FLOWCHARTS AND COMPUTERS

I. a) Listen to the text, mind the English intonation. b) Read the text to yourself and grasp the main idea of it.

An algorithm must provide an unambiguous, ordered set of instructions which lead to a solution for a certain class of problems. For simple tasks, algorithms can frequently be written in an abbreviated form of a natural language such as English. However that natural language is not an adequately precise means of algorithmic expression. To overcome this difficulty, flowcharts provide us with an algorithm language through which we can express various operations in terms of geometric shapes and introduce logical ordering through spatial location and flowlines. Before introducing new elements, however, more needs to be said about the practical uses of flowcharts.

Most flowcharts are developed as an intermediate step in preparing problems for computer solution. It is probable that some day algorithms written in a simplified form of natural language will be acceptable instruction sets for computers. Until then, however, the conversion of algorithms to the formal statements of computer languages must be made by programmers and the best language for the expression of algorithms will remain the flowchart.

The value of flowcharts in preparing computer programs can be considerably increased by designing the flowchart language to treat information flow and flowchart actions (in the process and decision boxes) in a way similar to the actual operations that occur in a computer. This fundamental similarity of operation does not limit the flowchart to a particular computer language, but ensures a minimum amount of difficulty in the final conversion of the algorithm to an operating computer program.

2. Average Reading

Text B

VARIABLES

I. a) Listen to the text. b) Read it (time limit is 3 min.). c) Find the part of it dealing with values of variables.

When we use a computer we are interested in obtaining values for different quantities. These quantities are not always mathematical

in nature and may involve such varied tasks as comparison of data, finding the best routine for a cross-country telephone call, or choosing the electrical voltages needed for the operation of equipment in an automated factory.

Quantities which can take different values in the course of computations are called variables. In a computer, values of variables are contained in separate memory storage locations in the computer memory. To identify these storage locations so that the data stored in them can be used in computations and other operations, we normally lean on mathematical tradition and invent variable names such as X, Y, HEIGHT, NUMBER, and so forth. By doing this we are able to specify operations on and between the different variables irrespective of the values actually stored in the memory storage locations. Operations like "Is X the same as Y?" or "Divide HEIGHT by WIDTH" express general relationships independent of the value of the quantities themselves.

When a variable is named, a link is established between the variable name and one particular storage location in the computer memory. That we use of a variable's name in a computer program is actually a reference to the contents of the associated storage location where the value of the variable is stored. A question such as "Is X greater than zero?" is equivalent to asking "Is the content of the storage location we call X greater than the value zero?"

The content of a storage location may be interpreted as a number, as alphabetic characters, or simply as a string of digits (Os or 1s), depending upon the use for which the variable is intended. Remember, the variable name is only an identifier for a particular memory storage location and that we may repeatedly change the value of variables by changing the contents of their storage locations.

There are three main classes of variables used in computers:

1. numeral variables;
2. alphanumeric variables;
3. logical variables.

As might be expected, numerical variables have their value represented by numbers. Alphanumeric variables, in contrast, have values composed of string of alphabetic characters, numerals or other symbols. Logical variables are restricted to just two values TRUE or FALSE or sometimes as YES or NO.

ASSIGNMENTS

I. a) Choose the key sentences from the Text A and compare them with the title of the text. b) Say what the text is about.

II. Skim through the Text B and find the part of it dealing with the use of variable's name. Translate it.

III. Answer the following questions.

1. How can algorithms be written in an abbreviated form? 2. What do flowcharts provide us with? 3. What improvements can be made for better expression of algorithm? 4. What are called variables?

5. What are values of variables contained? 6. What is the use of a variable's name in a computer program?

IV. Prepare a dialogue on your own situation.

V. Speak on the Text B according to your plan.

VI. Make a short summary of the Text B.

II. CLASSWORK

3. Close Reading

PRE-TEXT EXERCISES

I. Be sure that you know these words and word-combinations.

High-quality высококачественный; lists of qualities список (перечень) качеств; minimum speed and execution минимальные скорость создания и время выполнения (*программы*); efficient use of memory and features эффективное использование памяти и ее особенностей; good documentation and debugging capability хорошая документация (*на программу*) и хорошая способность к отладке (*программы*); modular модульность; maintainability удобство эксплуатации; adaptable адаптируемость, приспособляемость; mandatory обязательный; boundary граница, ограничение; branch instruction команда (раз)ветвления, перехода; clarification прояснение, ясность; will last long after you are gone будет долго служить после того, как вы уйдете; designer разработчик (*программы*); a careful yet important collection тщательная и все же важная подборка; subroutine подпрограмма; header block заголовочный блок, заголовок; full specification полное описание; associated data structure структура соответствующих данных; from this description alone replacement code can be generated из этого описания может быть создан только код замещения; sufficient associated line comments достаточные соответствующие строчные комментарии; non-self-modifying несамомодифицирующийся; position-independent позиционно независимый; by a flowchart с помощью блок-схемы; main program главная программа; should be executable starting at the first location желательно начинать выполнение с первой ячейки; I/0 jump table таблица входных / выходных переходов; partition разделять, расчленять; common sense should prevail здравый смысл должен преобладать; to call fewer than five times вызывать (в главную программу) менее пяти раз; it may be wiser рациональнее (разумнее) будет; instead of JSR/RTS (jump to subroutine / return from subroutine) вместо операторов «переход к подпрограмме» / «выход из подпрограммы».

Text C

HIGH-QUALITY PROGRAM

I. a) Read the text. b) Speak on the qualities of a good program.

Many lists of qualities of a good program exist. Ours include: 1. Correctness. 2. Minimum cost. 2. Minimum speed and execution.

4. Efficient use of memory and features. 5. Good documentation and debugging capability. 6. Modular. 7. Maintainable. 8. Adaptable.

Correctness. Almost everyone will agree that correctness is the most important quality in a program. No one would care much about how short or how fast your program is if it does not work.

Cost versus Speed. Many factors need to be considered when minimizing cost. Execution speed may not be important. But if use of the machine is in constant demand, a fast program is more desirable.

Documentation. A well-documented program is mandatory. Program boundaries and branch instructions need full clarification. Remember that your program will last long after you are gone.

The following documentation standards have been proposed by the designers. They represent a careful yet important collection of rules.

1. Each subroutine should have an associated header block containing at least the following elements:

a. A full specification for this subroutine — including associated data structures — such that from this description alone replacement code can be generated.

b. All usage of memory resources must be defined.

2. Code internal to each subroutine should have sufficient associated line comments to help in understanding the code.

3. All code must be non-self-modifying and position-independent.

4. Each subroutine that includes a loop must be separately documented by a flow chart.

5. The main program should be executable starting at the first location and should include an I/0 jump table immediately thereafter.

Modularity and Maintenance. If a program were modular, maintaining and adapting it would be easier than it were not. Modular programming partitions the program into pieces to write an independent module for each. As for the size of each module, common sense should prevail. For instance, suppose that a module consists of only two instructions and is called fewer than five times. It may be wiser to insert the two instructions directly into code instead of using JSR/RTS. It will not save space, but it will save execution time.

ASSIGNMENTS

I. a) Divide the text into logical parts. b) Find the key sentences, analyse and translate them.

II. Find the part of the text containing information about modular programming. Translate it.

III. Answer the following questions.

1. What is the most important quality in a program? 2. What documentation standards have been proposed by the designers? 3. Does modular programming partition the program?

IV. Ask additional questions and answer them. Work in pairs.

V. Prepare a dialogue on your own situation.
VI. Speak on high-quality program according to your plan.
VII. Translate the Text C to be sure you understand it well.

4. Searching Reading

PRE-TEXT EXERCISES

I. Match the following English words and word-combinations with the Russian ones.

replacement of values	под меткой B
replacement of the existing value	замена значений
destructive operation	замена существующего значения
under the label B	после выполнения операции замены
following the replacement operation	деструктивная операция — операция с нарушением информации

Text D

REPLACEMENT OF VALUES

I. Read the text and say about replacement of values.

The most basic operation in a computer involves changing the value of a variable. This is accomplished through replacement of the existing value stored in a computer memory by another value. When the existing value is replaced by a new value, the old value is lost forever. Replacement, which is the same as the substitution of a new value, is a distructive operation.

A convenient operation symbol for replacement is ←. If we use this symbol between two variables

$$A \leftarrow B$$

we interpret this as meaning "Replace the current contents of the storage location corresponding to A by the current content of B". The previous value of A is lost, while the value stored under the label of B remains unchanged. Following the replacement operation, the value of A will be the same as the value of B.

A more general form for the replacement operation can be written as:

variable ← expression

The expression on the right hand side of the arrow may be a constant or a single variable such as:

A ← 3.14	HEIGHT ← 10
C ← B	D ← FISH

The term expression is actually more general than simple constants or single variables. The term expression means any series of data operations among constants and variables that leads to a single value which can be stored in the location identified in the replacement statement.

When a replacement operation is executed by a computer, the following steps are involved;

a. Copies of current values of variables used in expression must be fetched from their locations in the computer memory.

b. Expression must be evaluated, using the rules associated with the operation symbols appear in expression, and reduced to a single value.

c. The value which results from the evaluation of expression must be transferred to the storage location assigned to variable.

ASSIGNMENTS

I. Answer the following questions.

1. What is the most basic operation in a computer? 2. What is replacement? 3. What is a convenient operation symbol for replacement? 4. How can a more general form for the replacement operation be written? 5. What does the term expression mean?

II. Discuss the problem of programming.

III. Express your opinion of the topic of the lesson.

IV. Look through the latest magazines and find additional information on the topic to discuss at the lesson.

III. GRAMMAR EXERCISES

I. Define the tense-forms of the verbs in these sentences and translate them.

1. Algorithm can frequently be written in an abbreviated form of a natural language such as English. 2. The conversion of algorithms to the formal statements of computer languages must be made by programmers. 3. Quantities which can take different values in the course of computations are called variables.

II. Translate these sentences and define the form and function of the Infinitive, Participle or Gerund.

1. Before introducing these new elements more needs to be said about the practical uses of flowcharts. 2. The value of flowcharts in preparing computer programs can be considerably increased by designing the flowchart language to treat information flow. 3. Many factors need to be considered when minimizing cost.